EZ SERIES CS

Replacement for the Applied Comfort, Carrier 51PH Series Wallmate, McQuay TPW Series, Keeprite Seasonall, Heil Quaker Series C, and Zoneaire CSM & CHP Series

Islandaire EZ Series CS is a replacement for the Applied Comfort, Carrier 51PH Wallmate Series, Mc Quay TPW Series, Keeprite Seasonall, Heil Quaker Series C and Zoneaire CSM & CHP units. Our commercial duty construction with heavy gauge galvanized steel and superior components create an efficient reliable unit. This design eliminates the need for any interior or exterior renovation. Use of the existing wall and louver saves time and money, two very important factors in today's competitive environment! Sloped front panel, motorized vent and fan cycle switch included. If the need does occur where the wall sleeve, duct kit and/or stamped steel or architectural louver needs to be replaced, we manufacture these accessories as well.

FEATURES

- Proudly Made in the U.S.A.
- ETL listed products
- Superior Energy Efficiency Ratios (EERs)
- Commercial Duty Construction with Heavy Gauge Galvanized Steel
- Designed for exact replacement of existing sleeve opening
- Energy Efficient Rotary Compressors
- P.S.C. Evaporator and Condenser Motors
- High-Efficiency Refrigeration Coils Used to Provide Superior Heat Transfer
- Units Available as Cooling only, Cooling with Electric Heat, Cooling with Hydronic Heat, or Heat Pumps
- Custom Options Available
- Available with State-of-the-Art Digital *Intellitemp*™ Control System
- Available with wired and wireless wall thermostats
- NYC MEA Number 358-93-E

Voltage/Line Cord
1 - 115v 20 Amps
2 - 230v 20 Amps
3 - 230v 30 Amps
4 - 230v Junction Box
5 - 115v 15 Amps
6 - 115v Junction Box
7 - 277v 20 Amps
8 - 277v Junction Box
9 - 230v 15 Amps

Functional Options
A- None
B- Motorized Damper
C- Fan Cycle Switch
D- Indoor Freeze Protect
E- Winter Operation

Functional Option Codes
A- A
B- B
C- BC
D- BCD
E- BCDE
H- BCE
L- BD
M- BDE
Q- BE
T- C
U- CD
V- CDE
Y- CE
2- D
3- DE
6- E

*Codes are entered into model number.

Cooling Capacity
09 - 9,500 BTUH
12 - 12,000 BTUH
15 - 15,000 BTUH

Model Type
CS - Carrier 51PH

Component
EZ - Cooling Chassis

System Type
A - Std. Chassis - R410a
B - Heat Pump - R410a

Return/Discharge Options
1 - Bot. Ret./Top Dis.
3 - Bot. Ret./Ducted Top Dis.
4 - Front Ret./Top Dis.
6 - Front Ret./Ducted Top Dis.

Identity Code
0 - Special
4 - Standard

EZ 12 A 2 CS A 1 S 1 4 A A

Heating Options
A - None Cooling Only
B - 2.5 Kw Elec. Heat (208V-277V)
C - 3.6 Kw Elec. Heat (208V-277V)
D - 4.2 Kw Elec. Heat (208V-277V)
E - 5.0 Kw Elec. Heat (230V-277V)

Hydronic Options
1 - None
2 - 24v NC Valve
3 - 115v NC Valve
4 - 230v NC Valve
5 - 277v NC Valve
6 - 24v NO Valve
7 - 115v NO Valve
8 - 230v NO Valve
9 - 277v NO Valve

Room Controls
C - 24v Remote Thermostat (MCO)
F - 24v Remote Stat/Master
G - 24v Remote Stat/Slave
M - Intellitemp™ Controls (Remote T-Stat)
N - Standard Electronic Controls (Remote T-Stat)
S - Digital Controls (Unit Mounted)
T - Intellitemp™ Controls (Unit Mounted)

Power Mgt. Options
A- None
C- Energy Mgt. N/O
D- Energy Mgt. N/C

Power Mgt. Codes
A- A
P- C
T- D

*Codes are entered into model number.

*Specifications are subject to change due to ongoing product development.

EZ SERIES CS

ACCESSORIES:

2400142	EZCS Wall sleeve, w/ aluminum louver
4080998	EZCS Sloped, front panel
6030216	EZCS Hydronic coil assembly, top mounted

MODELS

	EZ09				EZ12				EZ15		
VOLTS	115	230	208	277	115	230	208	277	230	208	277
BTUH COOLING	9,500	9,500	9,300	9,500	12,200	12,200	12,000	12,200	14,800	14,800	14,800
AMPS	8.1	4.1	4.4	3.7	10.9	5.5	5.8	5.0	7.2	7.5	6.5
WATTS COOLING	951	896	877	888	1214	1245	1214	1241	1626	1645	1626
EER	9.9	10.6	10.6	10.6	10.0	9.8	9.8	9.8	9.1	9.1	9.1
CFM HIGH	420	400	400	420	460	440	440	460	440	440	460
CFM LOW	280	260	260	280	280	260	260	280	280	260	280
BTUH HEATING	N/A	9,300	9,100	9,300	N/A	11,400	11,200	11,400	14,300	14,200	14,800
WATTS HEATING	N/A	901	780	871	N/A	1014	979	979	1290	1365	1380
C.O.P.	N/A	3.03	2.9	3.13	N/A	3.30	2.9	3.41	3.25	2.7	3.14

Heating Option	Voltage (1)	Wattage	B.T.U.s (2)	Amps (3)
B	208	2,050	7,000	10.46
	230	2,500	8,535	11.47
	277	2,500	8,535	9.63
C	208	2.950	10,070	14.78
	230	3,600	12,290	16.25
	277	3,600	12,290	13.60
D	208	3,433	11,720	17.10
	230	4,200	14,330	18.86
	277	4,200	14,330	15.76
E	208	4,100	14,000	20.31
	230	5,000	17,070	22.34
	277	5,000	17,070	18.65

(1) Voltage is Single Phase, Alternating Current and R.M.S. (2) Heating Capacity (B.T.U./Hr.) based on indoor blower motor and heating elements. (3) Amp values are a combination of indoor blower motor and heating elements.

Line Voltage	Maximum Amperage	Wall Socket Configuration	Receptacle Number	Electrical Heat Options
115	16		NEMA 5-20R	N/A
208/230	12		NEMA 6-15R	N/A
208/230	16		NEMA 6-20R	2.5 - 3.6
208/230	24		NEMA 6-30R	4.2 - 5.0
277	16		NEMA 7-20R	2.5 - 5.0

Heating capacities specified in accordance with ARI standard 380-82 at conditions of 47∞F WB outdoor and 70∞F DB/60∞F WB indoor. Wattage, Amperage, COP, EER listings include compressor, evaporator motor and condenser fan motor. Cooling capacities specified in accordance with ARI standard 380-82 at conditions of 95∞F DB/75∞F WB outdoor and 80∞F DB/67∞F WB indoor.

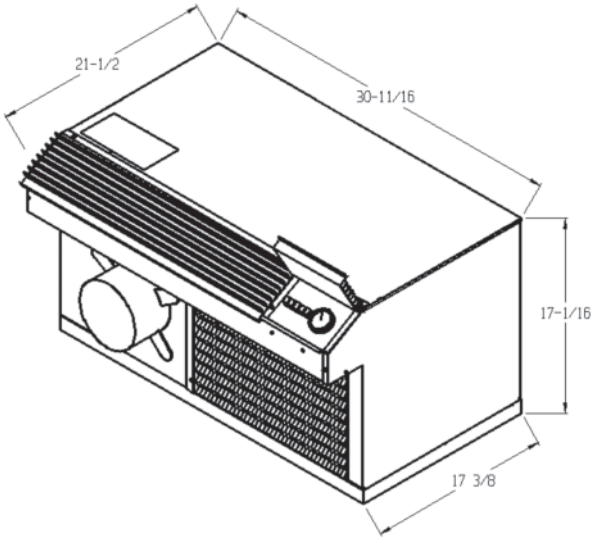

R410A ENVIRONMENTALLY SOUND REFRIGERANT